K-Factor Transformers

K-Factor transformers are designed to reduce the heating effects of harmonic currents created by loads like those shown in Chart A. The K-Factor rating is an index of the transformer's ability to withstand harmonic content while operating within the temperature limits of its insulating system. SolaHD K-Factor transformers have UL ratings of K-4, K-13, and K-20.

The SolaHD K-Factor design is a specialized transformer that offers these benefits:

- Conductors capable of carrying the harmonic currents of non-linear loads without exceeding the temperature rating of the insulation system.
- A transformer design that takes into account the increase in naturally occurring "stray" losses caused by non-linear loads. These losses cause standard transformers to dramatically overheat and substantially shorten design life.
- A core and coil design that manages the DC flux caused by triplen harmonics. As these harmonics increase, they cause additional current to circulate in the delta winding. This produces a DC flux in the core which leads to core saturation, voltage instability and overheating.

Features

- Conductors to carry harmonics of a K-rated load without exceeding insulation temperature ratings
- UL 1561 listed up to K-20 rated protection
- Rated temperature rise of 150°C, 220°C insulation
- Shielded for quality power
- Basic design takes "stray losses" into account and functions within safe operating temperatures
- Core and coil design engineered to manage the zero sequence flux caused by triplen harmonics
- Provides 100% rated current without overheating the windings or saturating the core

Listed
E25872

Accessories and Optional Design Styles*

- Wall mounting brackets (500 lbs maximum) (Item WB1C)
- Weather Shields (UL-3R)
- Totally enclosed non-ventilated designs (TENV) (Non UL)
- Low temperature rise units available
- Open core and coil designs (UL Recognized)
- Copper Wound designs
- Alternate voltages
- Compliant to NEMA TP-1 Standards

* Not all optional designs are UL listed. Contact Technical Services.

Chart A: Typical Load K-Factors

Load	K-Factor
Electric discharge lighting	K-4
UPS with optional input filter	K-4
Welders	K-4
Induction heating equipment	K-4
PLCs and solid state controls	K-4
Telecommunications equipment (e.g.. PBX)	K-13
UPS without input filtering	K-13
Multiwire receptacle circuits in general care areas of health care facilities and classrooms of schools, etc.	K-13
Multi-wire receptacle circuits supplying inspection or testing equipment on an assembly or production line	K-13
Mainframe computer loads	K-20
Solid state motor drives (variable speed drives)	K-20

REPRINTED WITH PERMISSION FROM *EDI MAGAZINE*

Selection Tables: Three Phase

Group A: K–4 Rated 480 Δ Primary, 208Y/120 Secondary, 60 Hz

UL Listed E25872

kVA	Catalog Number	NEMA 3R Weather Shield*	Height (inch)	Width (inch)	Depth (inch)	Approx. Ship Weight (lbs)	Design Style**	Elec Conn**	Primary Amps	Secondary Amps
15	**3H4T2H15S**	**WS–02**	23	18	14	187	1	5	18.1	41.7
30	**3H4T2H30S**	**WS–14**	28	23	16	292	1	5	36.1	83.4
45	**3H4T2H45S**	**WS–14**	28	23	16	376	1	5	54.2	125.0
75	**3H4T2H75S**	**WS–30**	34	28	22	569	1	5	90.3	208.0
112.5	**3H4T2H112S**	**WS–30**	34	28	22	768	1	5	135.0	313.0
150	**3H4T2H150S**	**WS–10**	44	33	21	933	1	5	181.0	417.0
225	**3H4T2H225S**	**WS–11**	46	36	24	1342	1	5	271.0	625.0
300	**3H4T2H300S**	**WS–11**	46	36	24	1525	1	5	361.0	834.0
500	**3H4T2H500S**	**WS–12**	65	45	35	2460	1	5	602.0	1390.0

Group B: K–13 Rated 480 Δ Primary, 208Y/120 Secondary, 60 Hz

UL Listed E25872

kVA	Catalog Number	NEMA 3R Weather Shield*	Height (inch)	Width (inch)	Depth (inch)	Approx. Ship Weight (lbs)	Design Style**	Elec Conn**	Primary Amps	Secondary Amps
15	**3H13T2H15S**	**WS–14**	28	23	16	305	1	5	18.1	41.7
30	**3H13T2H30S**	**WS–14**	28	23	16	405	1	5	36.1	83.4
45	**3H13T2H45S**	**WS–30**	34	28	22	590	1	5	54.2	125.0
75	**3H13T2H75S**	**WS–30**	34	28	22	805	1	5	90.3	208.0
112.5	**3H13T2H112S**	**WS–10**	44	33	21	972	1	5	135.0	313.0
150	**3H13T2H150S**	**WS–11**	46	36	24	1325	1	5	181.0	417.0
225	**3H13T2H225S**	**WS–11**	46	36	24	1515	1	5	271.0	625.0
300	**3H13T2H300S**	**WS–12**	65	45	35	2460	1	5	361.0	834.0

Group C: K–20 Rated 480 Δ Primary, 208Y/120 Secondary, 60 Hz

UL Listed E25872

kVA	Catalog Number	NEMA 3R Weather Shield*	Height (inch)	Width (inch)	Depth (inch)	Approx. Ship Weight (lbs)	Design Style**	Elec Conn**	Primary Amps	Secondary Amps
15	**3H20T2H15S**	**WS–14**	28	23	16	305	1	5	18.1	41.7
30	**3H20T2H30S**	**WS–14**	28	23	16	405	1	5	36.1	83.4
45	**3H20T2H45S**	**WS–30**	34	28	22	590	1	5	54.2	125.0
75	**3H20T2H75S**	**WS–30**	34	28	22	805	1	5	90.3	208.0
112.5	**3H20T2H112S**	**WS–10**	44	33	21	972	1	5	135.0	313.0
150	**3H20T2H150S**	**WS–11**	46	36	24	1325	1	5	181.0	417.0
225	**3H20T2H225S**	**WS–11**	46	36	24	1515	1	5	271.0	625.0
300	**3H20T2H300S**	**WS–12**	65	45	35	2460	1	5	361.0	834.0

Notes:

* Weather shields (set of two) must be ordered separately.

**Design Style and Electrical Connections can be found on pages 204-205.

Electrical Connections (Single Phase)

240 x 480 Volt Primary,
120/240 Volt Secondary
Taps: 2, 2½% FCAN; 4, 2½% FCBN

1

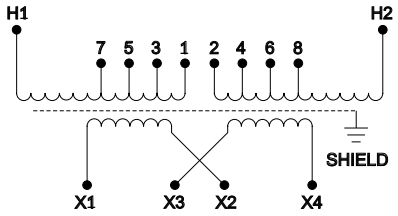

Primary Voltage	Interconnect	Connect Lines To
504	1 to 2	H1 & H2
492	2 to 3	H1 & H2
480	3 to 4	H1 & H2
468	4 to 5	H1 & H2
456	5 to 6	H1 & H2
444	6 to 7	H1 & H2
432	7 to 8	H1 & H2
252	H1 to 2 H2 to 1	H1 & H2
240	H1 to 4 H2 to 3	H1 & H2
228	H1 to 6 H2 to 5	H1 & H2
216	H1 to 8 H2 to 7	H1 & H2
Secondary Voltage	**Interconnect**	**Connect Lines To**
240	X2 to X3	X1 & X4
120-0-120	X2 to X3 X2 to ⏚	X1-X2-X4
120	X1 to X3 X2 to X4	X1 & X4
ES5 Series		

120/208/240/277 Volt Primary,
120/240 Volt Secondary
Taps: None

2

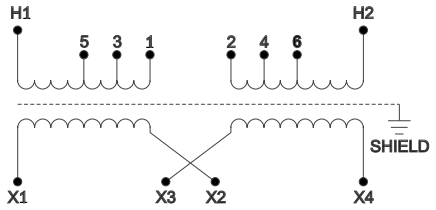

Primary Voltage	Interconnect	Connect Lines To
277	1 to 2	H1 & H2
240	3 to 4	H1 & H2
208	5 to 6	H1 & H2
120	H1 to 4 H2 to 3	H1 & H2
Secondary Voltage	**Interconnect**	**Connect Lines To**
240	X2 to X3	X1 & X4
120-0-120	X2 to X3 X2 to ⏚	X1-X2-X4
120	X1 to X3 X2 to X4	X1 & X4
ES12 Series		

190/200/208/220/380/400/415/440 Volt Pri.,
110/220 Volt Secondary
Taps: None

3

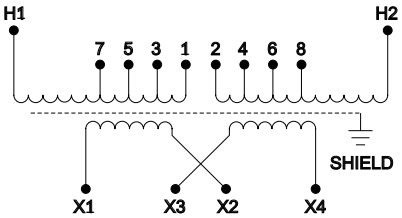

Primary Voltage	Interconnect	Connect Lines To
440	1 to 2	H1 & H2
415	3 to 4	H1 & H2
400	5 to 6	H1 & H2
380	7 to 8	H1 & H2
220	H1 to 2 1 to H2	H1 & H2
208	H1 to 4 3 to H2	H1 & H2
200	H1 to 6 5 to H2	H1 & H2
190	H1 to 8 7 to H2	H1 & H2
Secondary Voltage	**Interconnect**	**Connect Lines To**
220	X2 to X3	X1 & X4
110-0-110	X2 to X3 X2 to ⏚	X1-X2-X4
110	X1 to X3 X2 to X4	X1 & X4
ES14 Series		

600 Volt Primary,
120/240 Volt Secondary
Taps: 2, 2½% FCAN; 4, 2½% FCBN

4

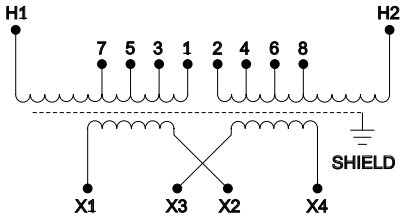

Primary H1-H2-H3	Interconnect	Connect Lines To
630	1 to 2	H1 & H2
615	2 to 3	H1 & H2
600	3 to 4	H1 & H2
585	4 to 5	H1 & H2
570	5 to 6	H1 & H2
555	6 to 7	H1 & H2
540	7 to 8	H1 & H2
Secondary Voltage	**Interconnect**	**Connect Lines To**
240	X2 to X3	X1 & X4
120-0-120	X2 to X3 X2 to ⏚	X1-X2-X4
120	X1 to X3 X2 to X4	X1 & X4
ES10 Series		

Electrical Connections (Three Phase)

480 Δ Volt Primary,
208Y/120 Volt Secondary
Taps: 2, 2½% FCAN; 4, 2½% FCBN

5

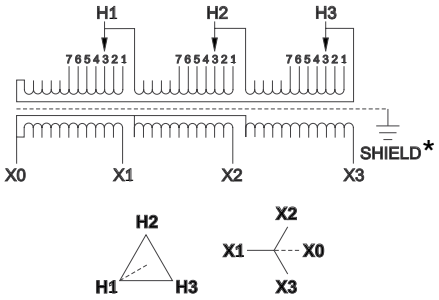

Primary H1-H2-H3		Secondary Voltage	
@ Tap	Voltage	X1, X2, X3	X0- X1, X2, X3
1	504	208	120
2	492		
3	480		
4	468		
5	456		
6	444		
7	432		

ET2 and 3H Series

**Shield available in electrostatically shielded units only.*

480 Δ Volt Primary,
240 Δ W/120 CT Volt Secondary
Taps: 2, 2½% FCAN; 4, 2½% FCBN

6

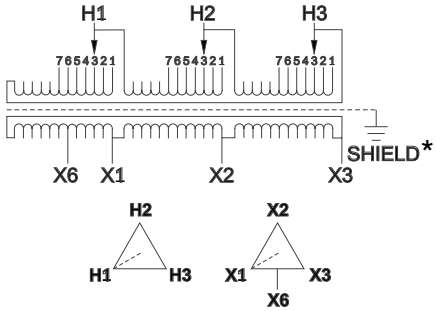

Primary H1-H2-H3		Secondary Voltage	
@ Tap	Voltage	X1, X2, X3	X6-X1, X6-X3
1	504	240	120
2	492		
3	480		
4	468		
5	456		
6	444		
7	432		

ET5 Series

**Shield available in electrostatically shielded units only.*

480 Δ Volt Primary
380/220 Volt Secondary
Taps: 2, 2½% FCAN; 4, 2½% FCBN

7

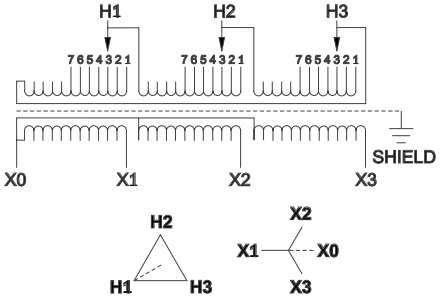

Primary H1–H2–H3		Secondary Voltage	
@ Tap	Voltage	X1, X2, X3	X0– X1, X2, X3
1	504	380	220
2	492		
3	480		
4	468		
5	456		
6	444		
7	432		

ET79 Series

480 Δ Volt Primary
480Y/277 Volt Secondary
Taps: 2, 2½% FCAN; 4, 2½% FCBN

8

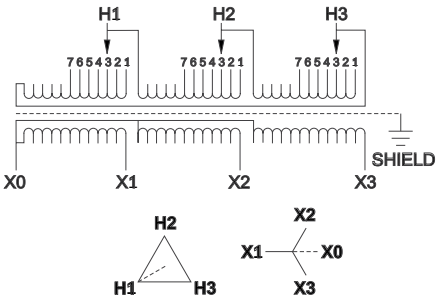

Primary H1-H2-H3		Secondary Voltage	
@ Tap	Voltage	X1, X2, X3	X0- X1, X2, X3
1	504	480	277
2	492		
3	480		
4	468		
5	456		
6	444		
7	432		

ET81 Series

208 Δ Volt Primary
208Y/120 Volt Secondary
Taps: 2, 2½% FCAN; 4, 2½% FCBN

9

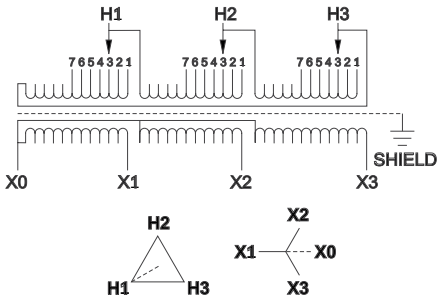

Primary H1-H2-H3		Secondary Voltage	
@ Tap	Voltage	X1, X2, X3	X0- X1, X2, X3
1	218	208	120
2	213		
3	208		
4	203		
5	198		
6	192		
7	187		

ET3 Series

208 Δ Volt Primary
480Y/277 Volt Secondary
Taps: 2, 2½% FCAN; 4, 2½% FCBN

10

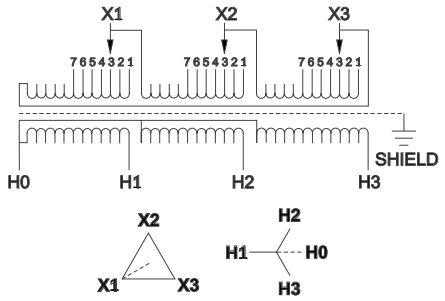

Primary X1-X2-X3		Secondary Voltage	
@ Tap	Voltage	H1-H2-H3	H0-H1, H2, H3
1	218	480	277
2	213		
3	208		
4	203		
5	198		
6	192		
7	187		

ET84 Series

Electrical Connections (Three Phase)

240 Δ Volt Primary
208Y/120 Volt Secondary
Taps: 2, 2½% FCAN; 4, 2½% FCBN

11

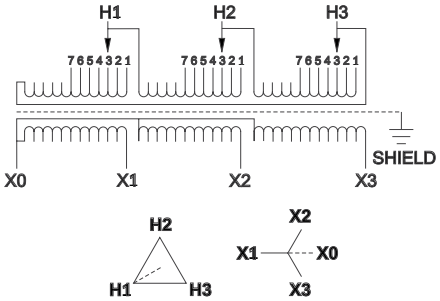

Primary H1-H2-H3		Secondary Voltage	
@ Tap	Voltage	X1, X2, X3	X0- X1, X2, X3
1	252	208	120
2	246		
3	240		
4	234		
5	228		
6	222		
7	216		

ET6 Series

240 Δ Volt Primary
480Y/277 Volt Secondary
Taps: 2, 2½% FCAN; 4, 2½% FCBN

12

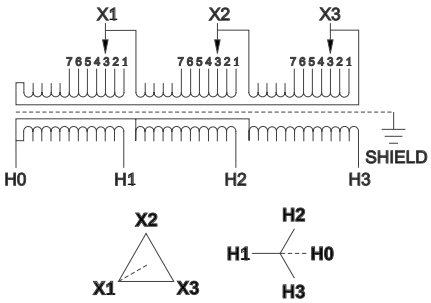

Primary X1–X2–X3		Secondary Voltage	
@ Tap	Voltage	H1, H2, H3	H0– H1, H2, H3
1	252	480	277
2	246		
3	240		
4	234		
5	228		
6	222		
7	216		

ET85 Series

600 Δ Volt Primary
208Y/120 Volt Secondary
Taps: 2, 2½% FCAN; 4, 2½% FCBN

13

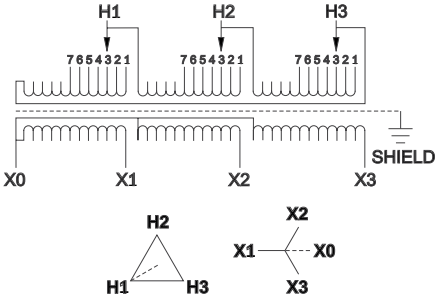

Primary H1-H2-H3		Secondary Voltage	
@ Tap	Voltage	X1, X2, X3	X0- X1, X2, X3
1	630	208	120
2	615		
3	600		
4	585		
5	570		
6	555		
7	540		

ET7 Series

600 Δ Volt Primary
480Y/277 Volt Secondary
Taps: 2, 2½% FCAN; 4, 2½% FCBN

14

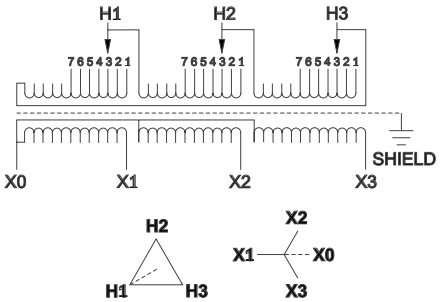

Primary H1-H2-H3		Secondary Voltage	
@ Tap	Voltage	X1, X2, X3	X0- X1, X2, X3
1	630	480	277
2	615		
3	600		
4	585		
5	570		
6	555		
7	540		

ET71 Series